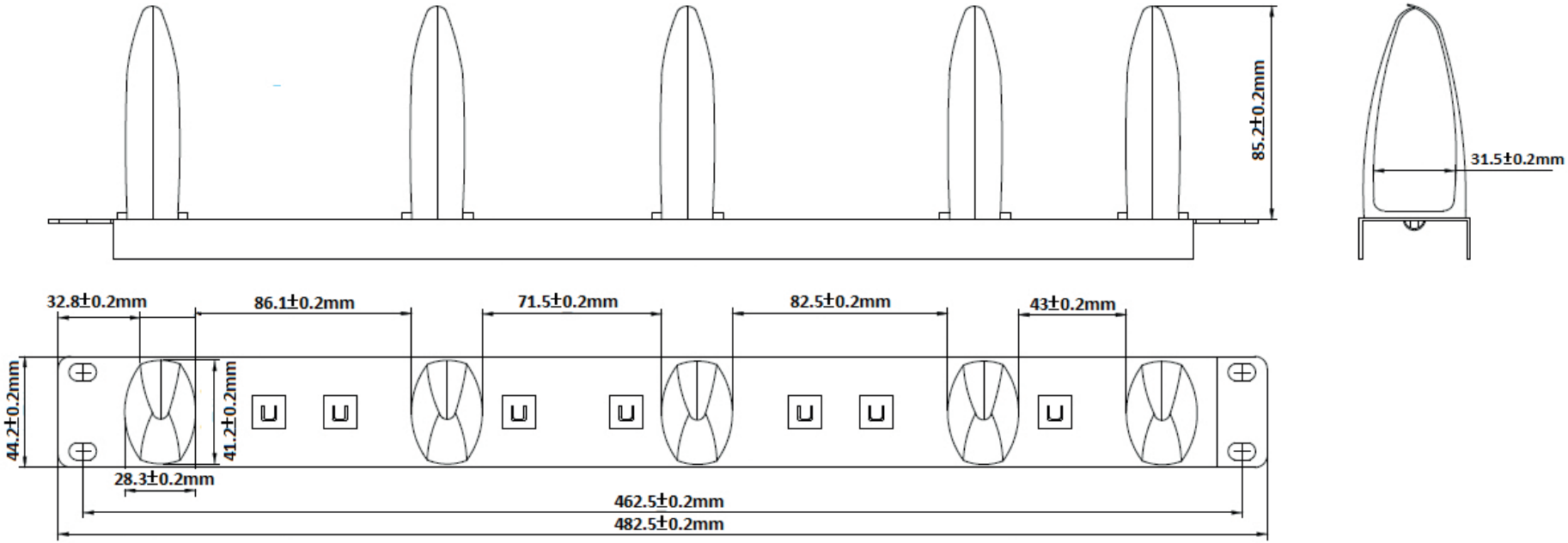
85.2±0.2mm
31.5±0.2mm
32.8±0.2mm
86.1±0.2mm
71.5±0.2mm
82.5±0.2mm
43±0.2mm
44.2±0.2mm
41.2±0.2mm
28.3±0.2mm
462.5±0.2mm
482.5±0.2mm